F012 536 541

Issue Stand } 00-03-01 **Fig./Abb. 1**

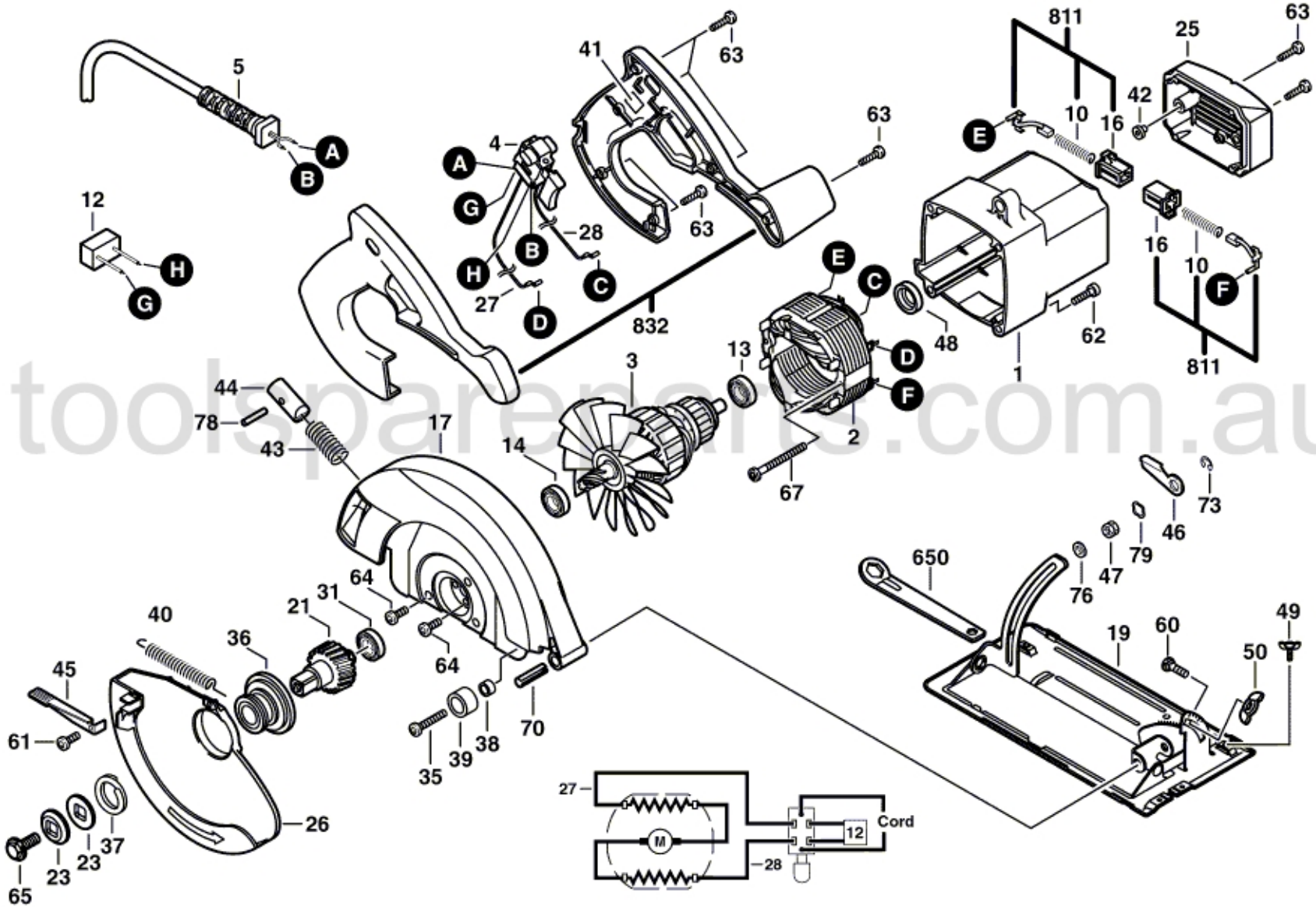

toolspareparts.com.au